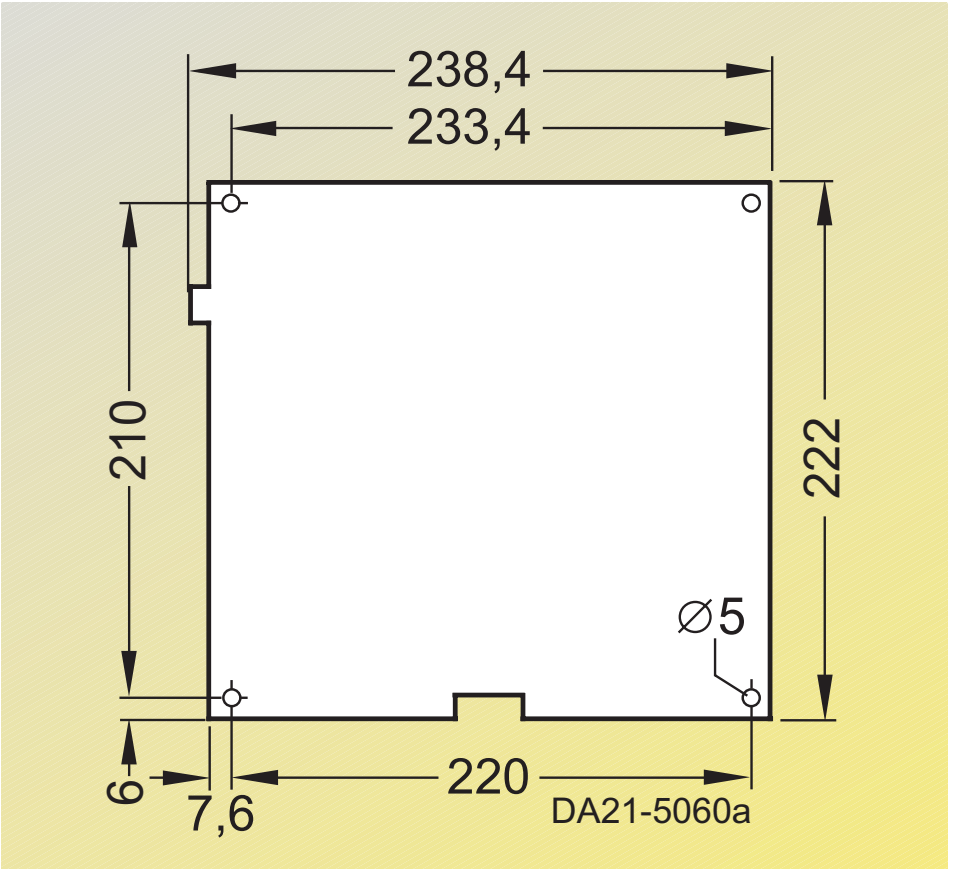

Fig. 2/2
Support plate, overall height approx. 72 mm