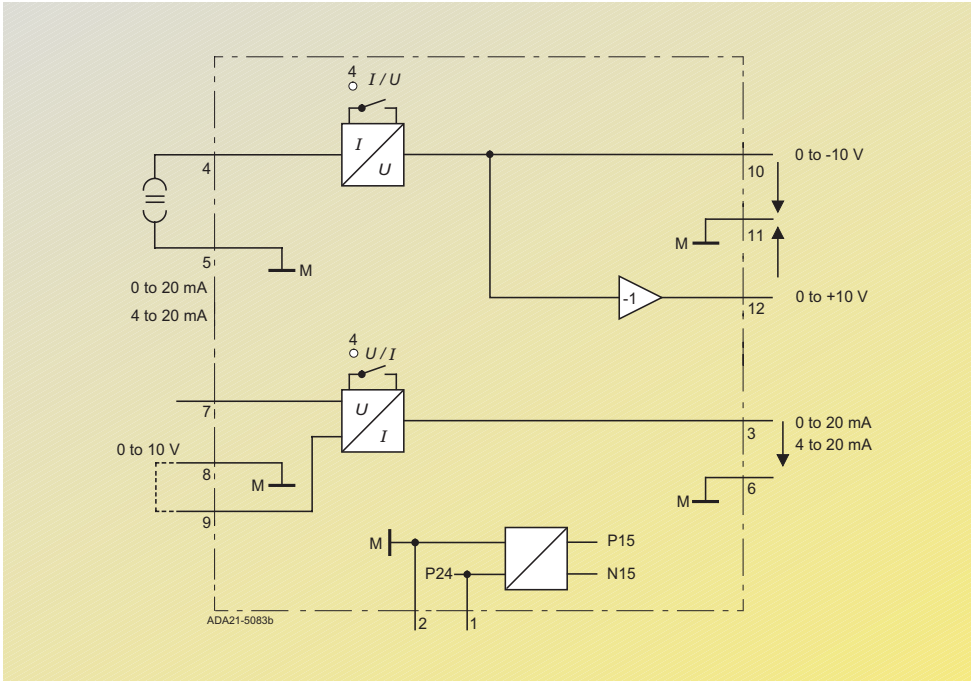
4
I / U
I
U
4
5
M
0 to 20 mA
4 to 20 mA
0 to -10 V
10
M
11
-1
0 to +10 V
12
4
U / I
U
I
7
0 to 10 V
8
M
9
0 to 20 mA
4 to 20 mA
3
M
6
M
P15
P24
N15
2
1
ADA21-5083b

Fig. 3/13